Cambridge Assessment International Education

Cambridge IGCSE™

CANDIDATE NAME	

CENTRE NUMBER						CANDIDATE NUMBER					

8324509767

PHYSICS **0625/42**

Paper 4 Theory (Extended) **February/March 2021**

1 hour 15 minutes

You must answer on the question paper.

[No additional materials are needed.]

INSTRUCTIONS

- Answer **all** questions.
- Use a black or dark blue pen. You may use an HB pencil for any diagrams or graphs.
- Write your name, centre number and candidate number in the boxes at the top of the page.
- Write your answer to each question in the space provided.
- Do **not** use an erasable pen or correction fluid.
- Do **not** write on any bar codes.
- You may use a calculator.
- You should show all your working and use appropriate units.
- Take the weight of 1.0 kg to be 10 N (acceleration of free fall = 10 m/s^2).

INFORMATION

- The total mark for this paper is 80.
- The number of marks for each question or part question is shown in brackets [ ].

This document has **16** pages. Any blank pages are indicated.

DC (CJ/CGW) 203605/2
© UCLES 2021

[Turn over

www.root19.com +91 - 9969 353 391

1 **(a)** Fig. 1.1 shows a piece of glass of thickness 2.0 cm and area 0.15 m^2.

The density of the glass is 2.6×10^3 kg / m^3.

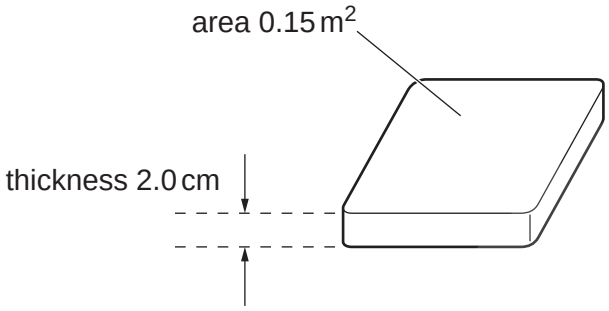

Fig. 1.1 (not to scale)

Calculate the weight of the piece of glass.

weight = ... [3]

(b) The piece of glass shown in Fig. 1.1 is used as the vertical viewing window of an aquarium. The atmospheric pressure outside the aquarium is 1.0×10^5 Pa. The average pressure on the inside of the aquarium window is 1.3×10^5 Pa.

Calculate the resultant force acting on the window due to these pressures and state the direction in which it acts.

force = ...

direction of force .....
[4]

www.root19.com +91 - 9969 353 391

(c) Fig. 1.2 shows a vacuum pump connected to the top of a vertical tube with its lower end immersed in a tank of liquid. The pump reduces the pressure above the column to zero and the pressure at point X is 9.6×10^4 Pa.

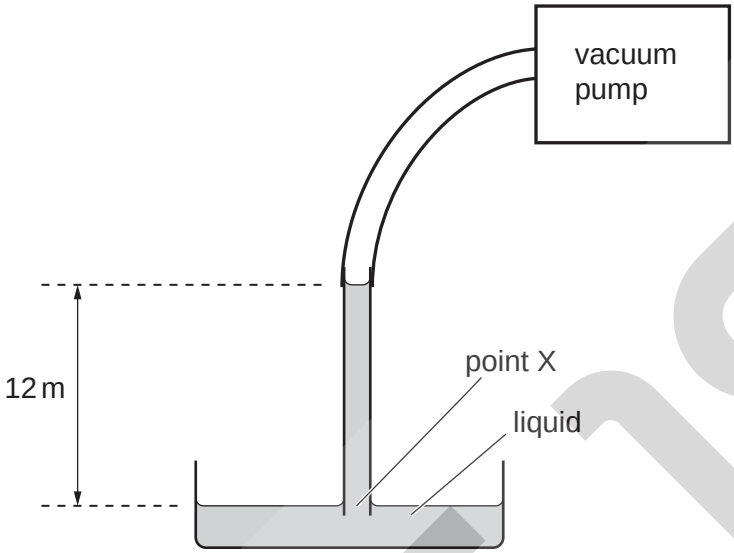

Fig. 1.2 (not to scale)

Calculate the density of the liquid.

density = ... [3]

[Total: 10]

www.root19.com +91 - 9969 353 301

2 **(a)** **(i)** State what is meant by the *moment* of a force about a point.

..... [1]

(ii) Fig. 2.1 shows a large crane on a construction site lifting a block of mass 14 000 kg.

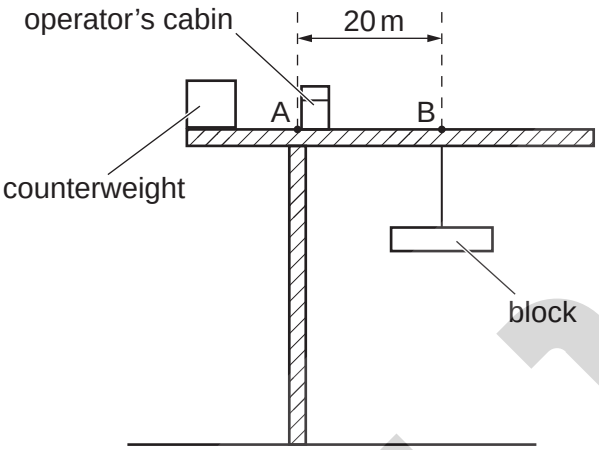

Fig. 2.1

Calculate the moment about A due to the 14 000 kg block suspended from B.

moment = ... [2]

(b) **(i)** Speed is a scalar quantity and velocity is a vector quantity. State the difference between a scalar quantity and a vector quantity.

.....

..... [2]

(ii) Write down **one** other scalar quantity and **one** other vector quantity.

scalar quantity .....

vector quantity .....
[2]

www.root19.com +91 - 9969 353 391

(c) Fig. 2.2 shows two forces acting on an object.

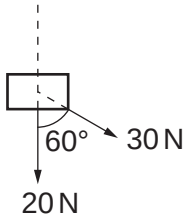

Fig. 2.2 (not to scale)

Draw a scale diagram to determine the resultant force acting on the object. State the scale you use.

scale .....

magnitude of resultant force = ...

direction of resultant relative to the direction of the 20 N force = ...
[4]

[Total: 11]

www.root19.com +91 - 9969 353 301

3 A power station burns waste materials from farm crops to generate electricity.

(a) State and explain whether this process is renewable.

statement .....

explanation .....

.....
[2]

(b) The power station uses some of its waste thermal energy to heat water for houses in a nearby town.

State **one** problem of using waste energy in this way if the power station is far from the town.

.....

Suggest a way of reducing this problem.

.....

.....
[2]

(c) State **two** environmental consequences of burning coal to generate electricity.

consequence 1. .....

consequence 2. .....
[2]

[Total: 6]

www.root19.com +91 - 9969 353 391

4 **(a)** In terms of the momentum of molecules, explain how a gas exerts pressure on the walls of its container.

.....

.....

.....

.....

.....

.....

..... [4]

(b) A fixed mass of gas of volume V_1 is at a pressure p_1. It is compressed to a volume V_2.

(i) Complete the equation for the final pressure p_2 of the gas when the gas is compressed at constant temperature.

$p_2 =$

[2]

(ii) State and explain how the final pressure compares with p_2 when the temperature of the gas increases during compression.

statement .....

explanation .....

.....

.....

.....

[3]

[Total: 9]

© UCLES 2021

www.root19.com +91 - 9969 353 301

5 **(a)** State the name of the reflection of a sound wave or ultrasound wave.

..... [1]

(b) Fig. 5.1 shows an ultrasound wave being used to scan an internal organ of a human body.

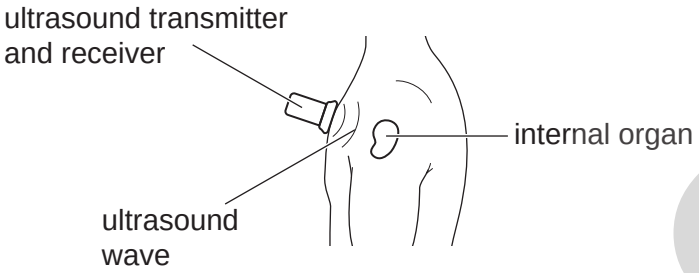

Fig. 5.1

The ultrasound wave has a frequency of 2.0 MHz and passes through human tissue at a speed of 1500 m/s.
Calculate the wavelength of the ultrasound wave in human tissue.

wavelength = ... [3]

(c) Fig. 5.2 shows crests of a wave from a point source S approaching a straight barrier.

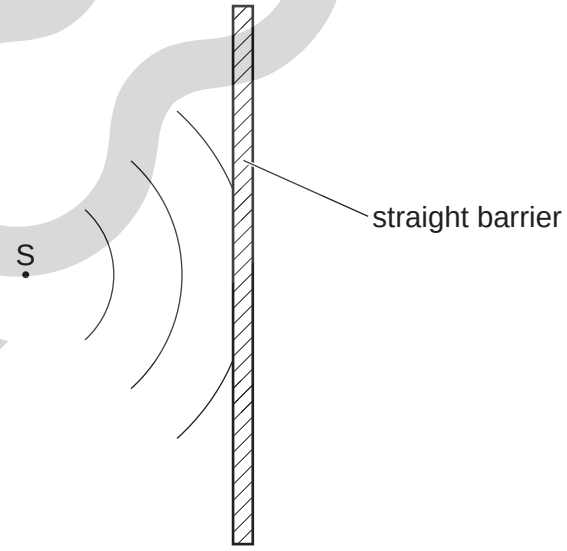

Fig. 5.2

(i) On Fig. 5.2, indicate and label **one** wavelength.

(ii) On Fig. 5.2, draw **three** crests of the wave reflected from the barrier.

[3]

[Total: 7]

www.root19.com +91 - 9969 353 391

6 **(a)** Fig. 6.1 is a full scale diagram showing a converging lens, the two principal focuses F_1 and F_2 and an object PO.

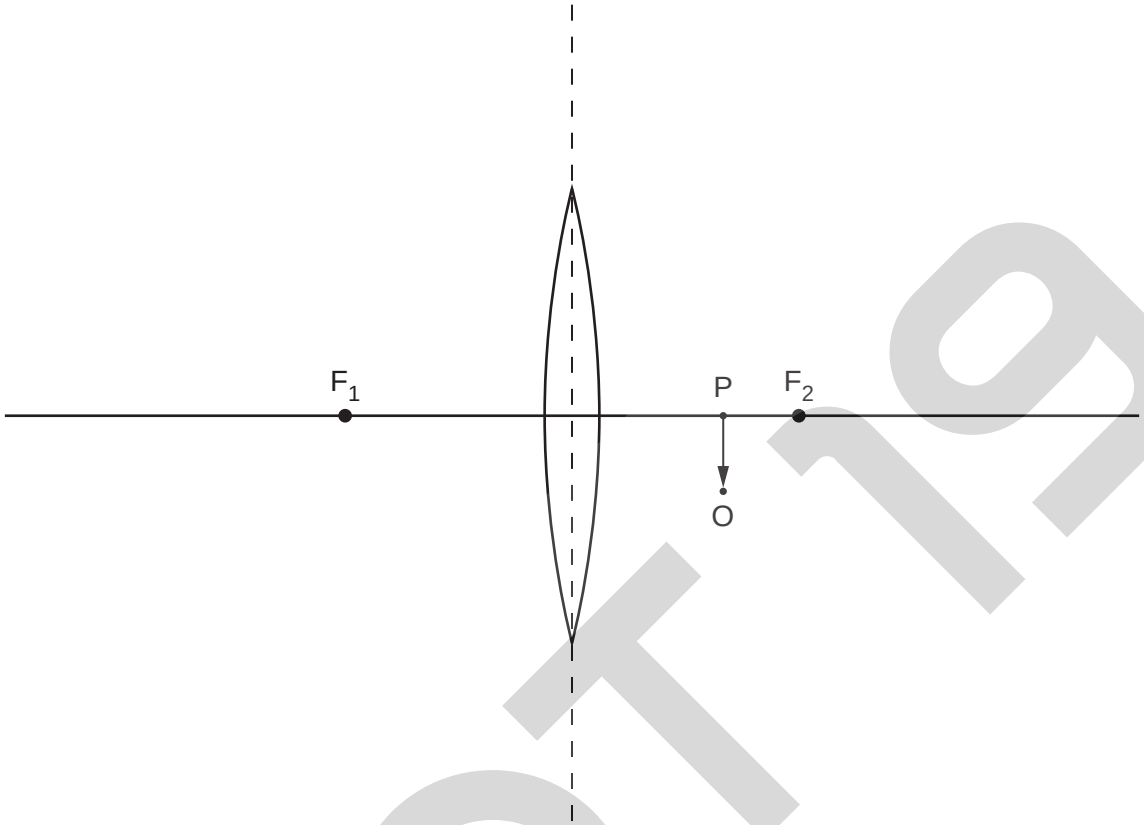

Fig. 6.1

On Fig. 6.1, draw two rays from point O of the object to determine the position of the image. Label the image IJ. Measure the length of the image.

image length = ...
[3]

(b) Ring **three** descriptions of the image.

diminished **magnified** **real** **same size**

same way up as object **upside down compared to object** **virtual** [3]

www.root19.com +91 - 9969 353 301

(c) Fig. 6.2 shows three rays of green light passing through glass blocks.

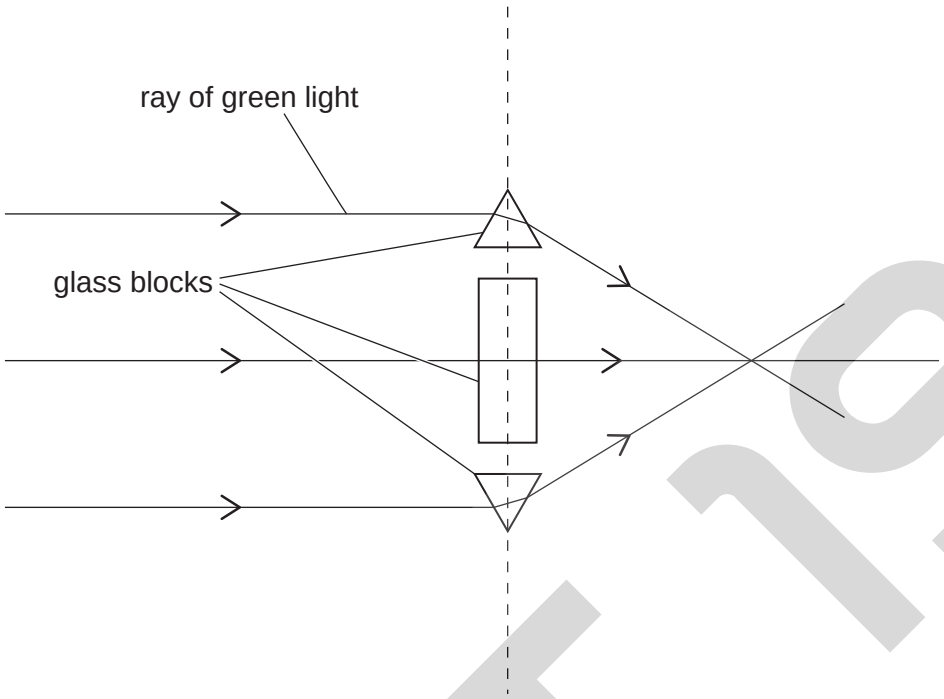

Fig. 6.2

Three rays of red light approach the glass blocks on the same paths as the rays of green light.

On Fig. 6.2, draw the paths of these rays of red light to the right of the glass blocks. [2]

[Total: 8]

www.root19.com +91 - 9969 353 391

7 Fig. 7.1 shows a horizontal conducting wire XY between two opposite magnetic poles. Wire XY forms a circuit with an ammeter.

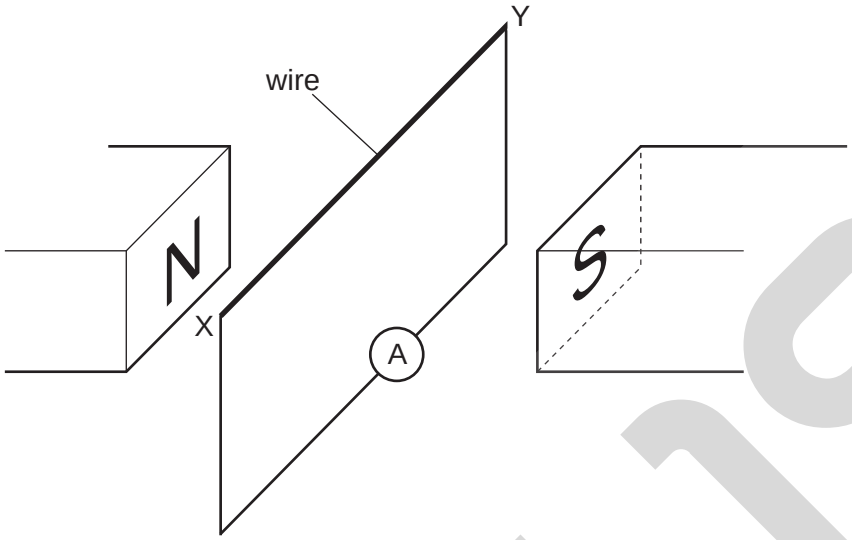

Fig. 7.1

(a) Explain why the reading on the ammeter is zero when the wire XY is not moving.

.....

..... [1]

(b) The wire XY is moved and there is a deflection on the ammeter that indicates there is a current in the wire from X to Y.

On Table 7.1, tick **one** box to indicate the direction of the movement of the wire XY and explain your answer.

Table 7.1

into page	out of page	to the left	to the right	to the bottom of the page	to the top of the page

explanation .....

.....

.....
[3]

(c) State what is observed on the ammeter when the wire XY is moved

(i) in the opposite direction to part **(b)** ..... [1]

(ii) in the same direction as part **(b)** but at a greater speed ..... [1]

[Total: 6]

www.root19.com +91 - 9969 353 301

8 **(a)** Define electromotive force (e.m.f.).

.....

..... [1]

(b) Fig. 8.1 shows a source E of e.m.f. 60 V in a circuit.

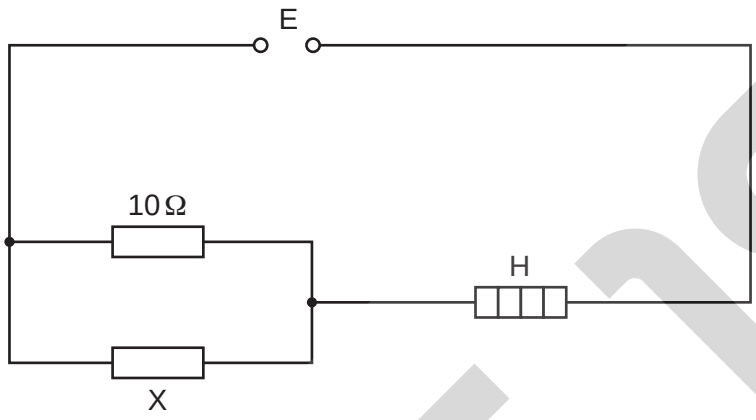

Fig. 8.1

The heater H has a resistance of 22.5 Ω and the potential difference (p.d.) across it is 45 V.

Calculate:

(i) the power of the heater

power = ... [3]

(ii) the p.d. across resistor X

p.d. = ... [2]

(iii) the current in the 10 Ω resistor.

current = ... [2]

[Total: 8]

© UCLES 2021

9 **(a)** Write down the truth table for an OR gate.

[2]

(b) Draw the symbol for a NOR gate.

[1]

(c) Fig. 9.1 shows a digital circuit designed to produce the values shown in Table 9.1 for the output S from the two inputs P and Q.

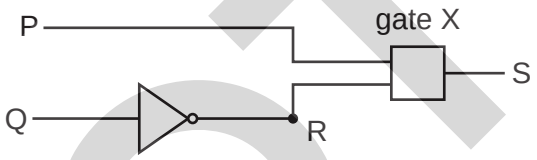

Fig. 9.1

(i) Table 9.1 is the truth table for the circuit shown in Fig. 9.1.

Table 9.1

P	Q	R	S
0	0		0
0	1		0
1	0		1
1	1		0

Complete the column for point R in Table 9.1. [1]

(ii) State which type of gate is used for gate X. Explain your answer.

statement .....

explanation .....

.....

.....

[3]

[Total: 7]

www.root19.com +91 - 9969 353 301

10 **(a)** State the proton number, nucleon number and the value of the charge on an α-particle.

proton number .....

nucleon number .....

charge .....
[3]

(b) A nucleus of strontium-90 consists of 38 protons and 52 neutrons. Strontium-90 is radioactive and decays by β-emission to an isotope of yttrium. The symbol for strontium is Sr and the symbol for yttrium is Y. Write down the nuclide equation of this decay.

[3]

(c) The half-life of radon-220 is 56 s. A sample of radon-220 is in a container. After 112 s the mass of radon-220 is 9.2 mg.

Calculate the mass of the original sample.

mass = ... [2]

[Total: 8]

© UCLES 2021
www.root19.com

+91 - 9969 353 391

BLANK PAGE

© UCLES 2021
www.root19.com

+91 - 9969 353 391

BLANK PAGE

Permission to reproduce items where third-party owned material protected by copyright is included has been sought and cleared where possible. Every reasonable effort has been made by the publisher (UCLES) to trace copyright holders, but if any items requiring clearance have unwittingly been included, the publisher will be pleased to make amends at the earliest possible opportunity.

To avoid the issue of disclosure of answer-related information to candidates, all copyright acknowledgements are reproduced online in the Cambridge Assessment International Education Copyright Acknowledgements Booklet. This is produced for each series of examinations and is freely available to download at www.cambridgeinternational.org after the live examination series.

Cambridge Assessment International Education is part of the Cambridge Assessment Group. Cambridge Assessment is the brand name of the University of Cambridge Local Examinations Syndicate (UCLES), which itself is a department of the University of Cambridge.

www.root19.com +91 - 9969 353 391